LECKEY

PAL Spare Parts Catalogue

LECKEY

Contents

03	PAL Seat Product Overview
04-05	PAL Seat Assembly
06	PAL High Seat Assembly
07	PAL Tray Assembly
08	PAL Ski Assembly
09	PAL Footrest Assembly
10	PAL Two Person Table Assembly
11	PAL Four Person Table Assembly
12	PAL Rocker/Stabiliser Assembly

LECKEY

PAL Seat - Product Overview

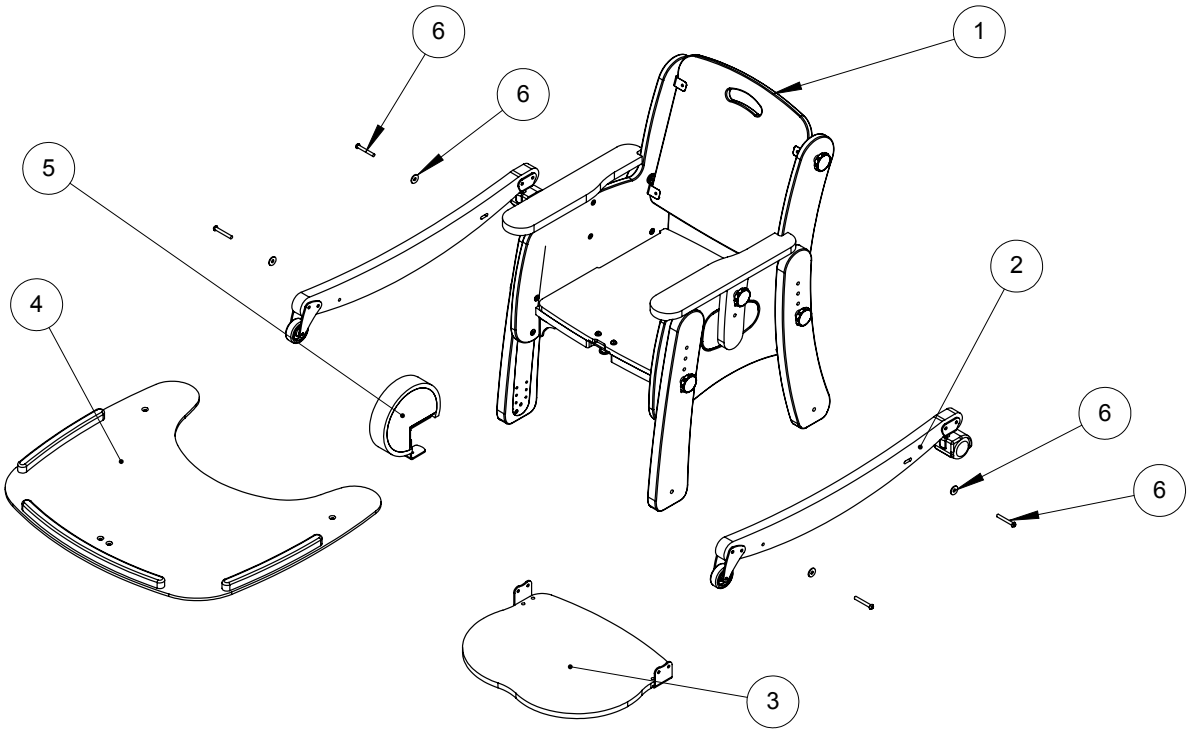

Pos.	Leckey Code	Description	Qty	Compatible with			
				Size 1	Size 2	Size 3	Size 4
1	135-1600-XX	Chair Size 1	1	✓			
1	135-2600-XX	Chair Size 2	1		✓		
1	135-3600-XX	Chair Size 3	1			✓	
1	135-4600-XX	Chair Size 4	1				✓
2	135-1610	Ski With Castors Size 1	2	✓			
2	135-2610	Ski With Castors Size 2	2		✓		
2	135-3610	Ski With Castors Size 3	2			✓	
2	135-4610	Ski With Castors Size 4	2				✓
3	135-1603	Footrest Size 1	1	✓			
3	135-2603	Footrest Size 2	1		✓		
3	135-3603	Footrest Size 3	1			✓	
3	135-4603	Footrest Size 4	1				✓
4	135-1620	Activity Tray Size 1	1	✓			
4	135-2620	Activity Tray Size 2	1		✓		
4	135-3620	Activity Tray Size 3	1			✓	
4	135-4620	Activity Tray Size 4	1				✓
5	135-1602-XX	Pommel Size 1	1	✓	✓		
5	135-3602-XX	Pommel Size 3	1			✓	✓
6	SP-1043	Ski Attachment Screw Kit	1	✓	✓	✓	✓

PAL Seat Assembly

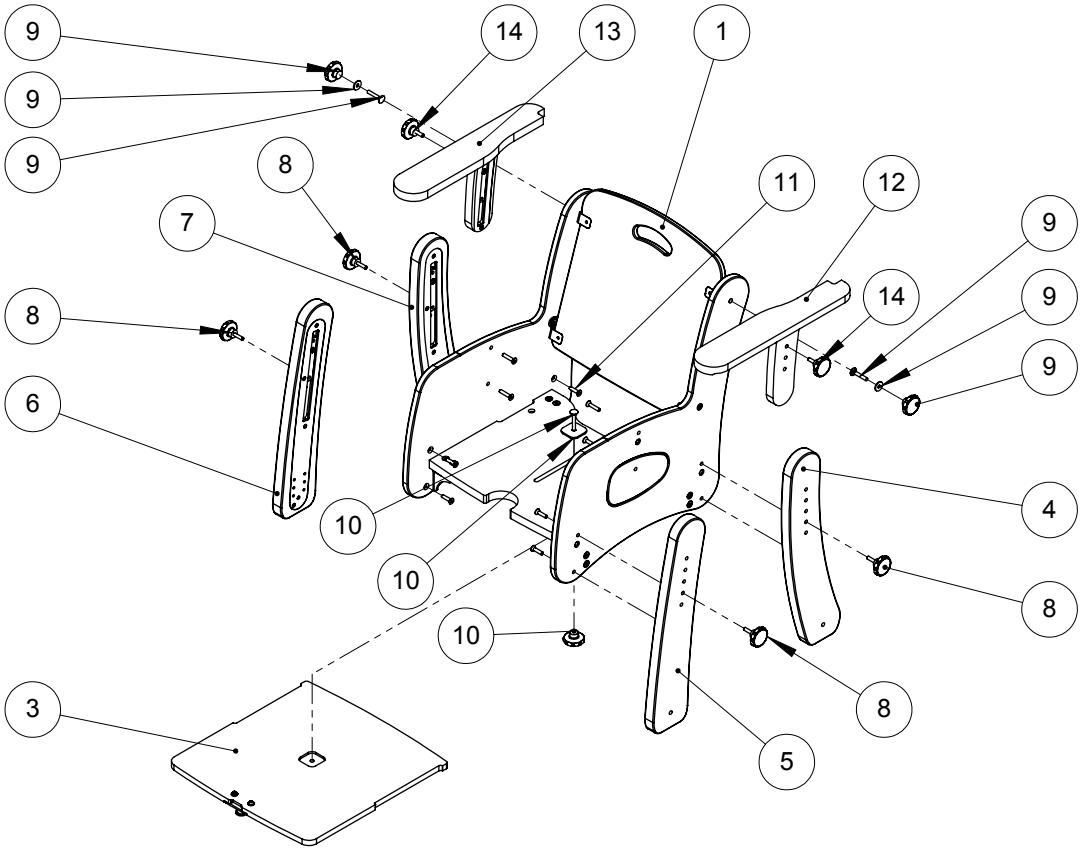

Pos.	Leckey Code	Description	Qty	Compatible with			
				Size 1	Size 2	Size 3	Size 4
1	135-9001-XX	Seat Size 1	1	✓			
1	135-9002-XX	Seat Size 2	1		✓		
1	135-9003-XX	Seat Size 3	1			✓	
1	135-9004-XX	Seat Size 4	1				✓
2	135-1657	Lap Belt Size 1	1	✓			
2	135-2657	Lap Belt Size 2	1		✓		
2	135-3657	Lap Belt Size 3	1			✓	
2	135-4657	Lap Belt Size 4	1				✓
3	135-1108	Sliding Seatbase Size 1	1	✓			
3	135-2108	Sliding Seatbase Size 2	1		✓		
3	135-3108	Sliding Seatbase Size 3	1			✓	
3	135-4108	Sliding Seatbase Size 4	1				✓
4	135-1612	Leg Rear Left Size 1	1	✓			
4	135-2612	Leg Rear Left Size 2	1		✓		
4	135-3612	Leg Rear Left Size 3	1			✓	
4	135-4612	Leg Rear Left Size 4	1				✓

LECKEY

PAL Seat Assembly

Pos.	Leckey Code	Description	Qty	Compatible with			
				Size 1	Size 2	Size 3	Size 4
5	135-1618	Leg Front Left Size 1	1	✓			
5	135-2618	Leg Front Left Size 2	1		✓		
5	135-3618	Leg Front Left Size 3	1			✓	
5	135-4618	Leg Front Left Size 4	1				✓
6	135-1611	Leg Front Right Size 1	1	✓			
6	135-2611	Leg Front Right Size 2	1		✓		
6	135-3611	Leg Front Right Size 3	1			✓	
6	135-4611	Leg Front Right Size 4	1				✓
7	135-1613	Leg Rear Right Size 1	1	✓			
7	135-2613	Leg Rear Right Size 2	1		✓		
7	135-3613	Leg Rear Right Size 3	1			✓	
7	135-4613	Leg Rear Right Size 4	1				✓
8	SF90	M6 Knob Male X 25 Thread	4	✓	✓	✓	✓
9	SP-1041	Backrest Knob & Screw Kit	4	✓	✓	✓	✓
10	135-9000	Sliding Seatbase Knob & Screw Kit	1	✓	✓	✓	✓
11	SP-1042	Leg Attachment Screw Kit	4	✓	✓	✓	✓
12	135-1617	Armrest Left Size 1	1	✓			
12	135-2617	Armrest Left Size 2	1		✓		
12	135-3617	Armrest Left Size 3	1			✓	
12	135-4617	Armrest Left Size 4	1				✓
13	135-1616	Armrest Right Size 1	1	✓			
13	135-2616	Armrest Right Size 1	1		✓		
13	135-3616	Armrest Right Size 1	1			✓	
13	135-4616	Armrest Right Size 1	1				✓
14	SF90	M6 Knob Male X 20 Thread	2	✓	✓	✓	✓

LECKEY

PAL - High Seat Assembly

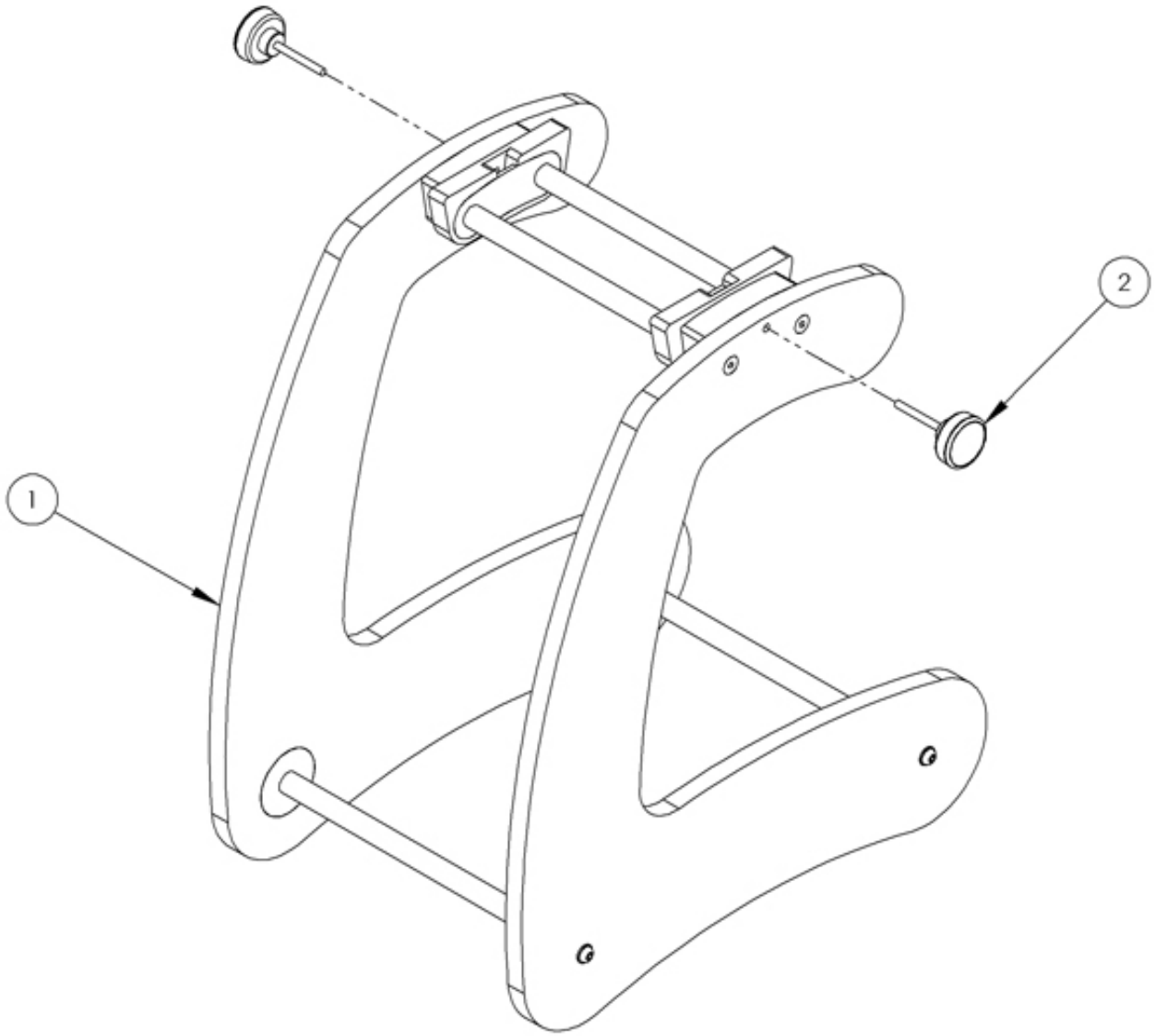

Pos.	Leckey Code	Description	Qty	Compatible with			
				Size 1	Size 2	Size 3	Size 4
1	135-1630	High Seat Frame (Size 1 Only)	1	✓			
2	SF90	Wixroyd Knob M6	2	✓			

PAL - Tray Assembly

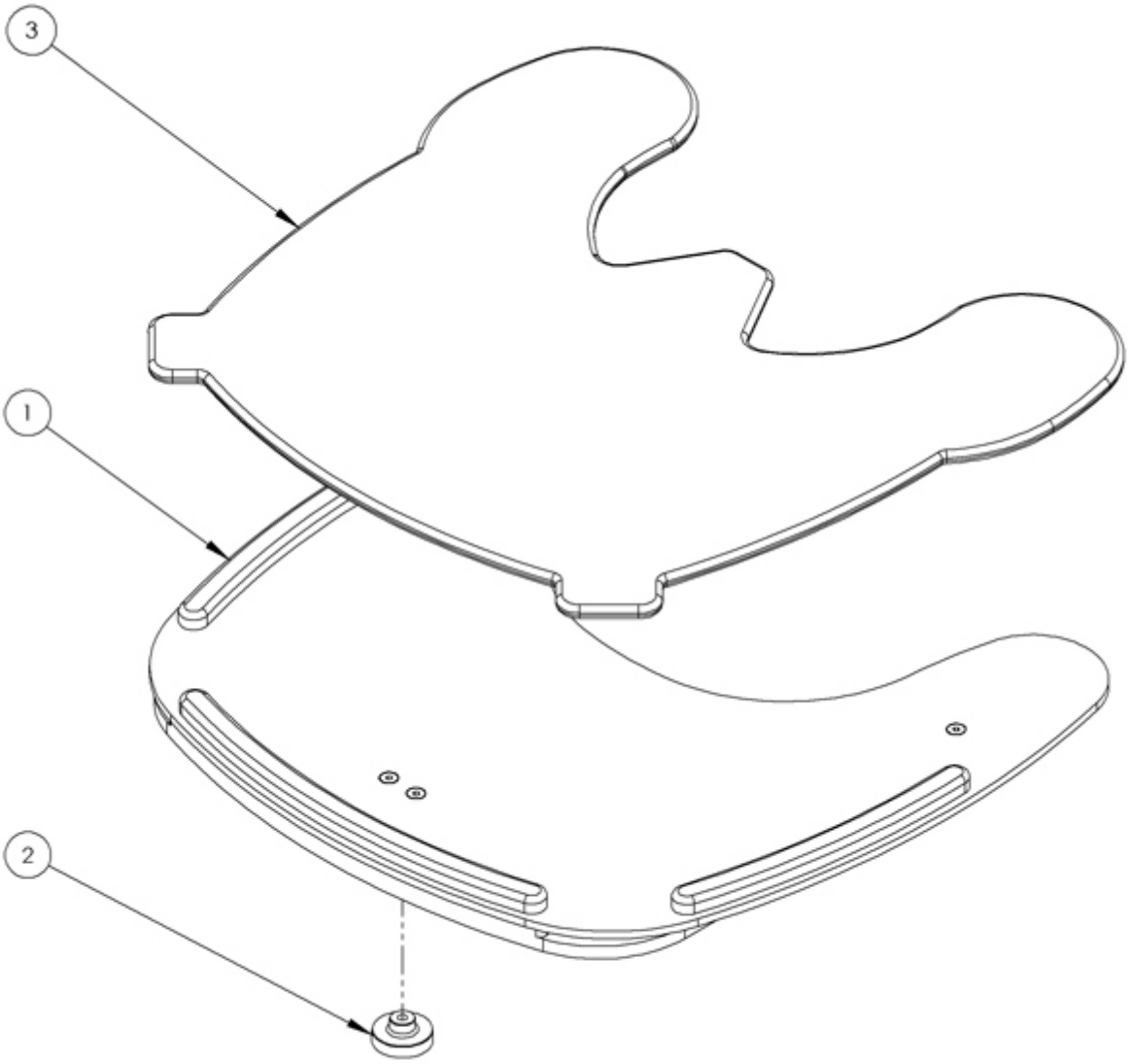

Pos.	Leckey Code	Description	Qty	Compatible with			
				Size 1	Size 2	Size 3	Size 4
1	135-1620	Activity Tray Size 1	1	✓			
1	135-2620	Activity Tray Size 2	1		✓		
1	135-3620	Activity Tray Size 3	1			✓	
1	135-4620	Activity Tray Size 4	1				✓
2	SF90	Wixroyd Knob M6	1	✓	✓	✓	✓
3	135-1656	Tray Pad Size 1	1	✓			
3	135-2656	Tray Pad Size 2	1		✓		
3	135-3656	Tray Pad Size 3	1			✓	
3	135-4656	Tray Pad Size 4	1				✓

LECKEY

PAL - Ski Assembly

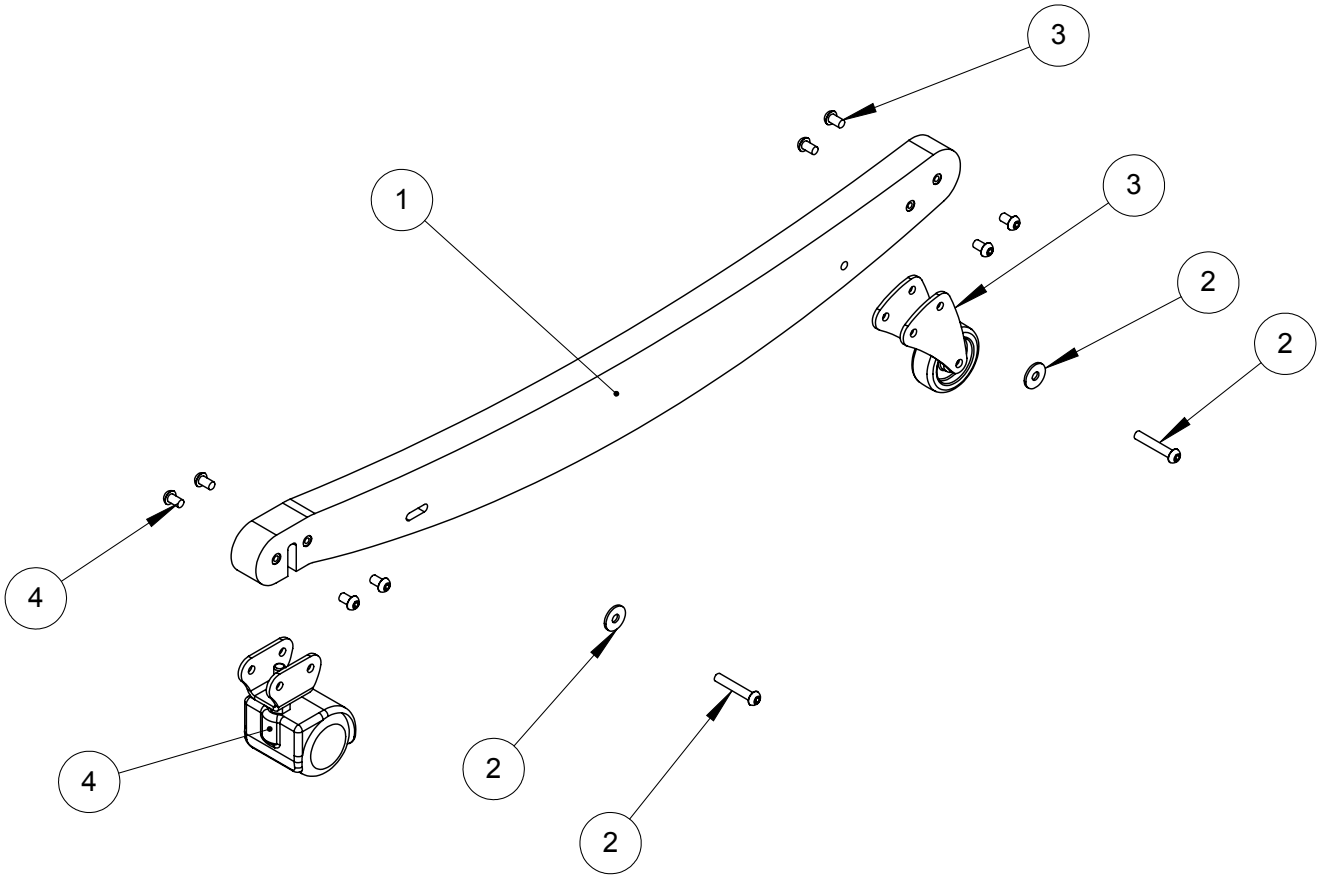

Pos.	Leckey Code	Description	Qty	Compatible with			
				Size 1	Size 2	Size 3	Size 4
1	135-1610	Ski With Castors Size 1	1	✓			
1	135-2610	Ski With Castors Size 2	1		✓		
1	135-3610	Ski With Castors Size 3	1			✓	
1	135-4610	Ski With Castors Size 4	1				✓
2	SP-1043	Ski Attachment Screw Kit	1	✓	✓	✓	✓
3	135-9004	Front Castor Assembly	1	✓	✓	✓	✓
4	135-9005	Rear Castor Assembly	1	✓	✓	✓	✓

PAL - Footrest Assembly

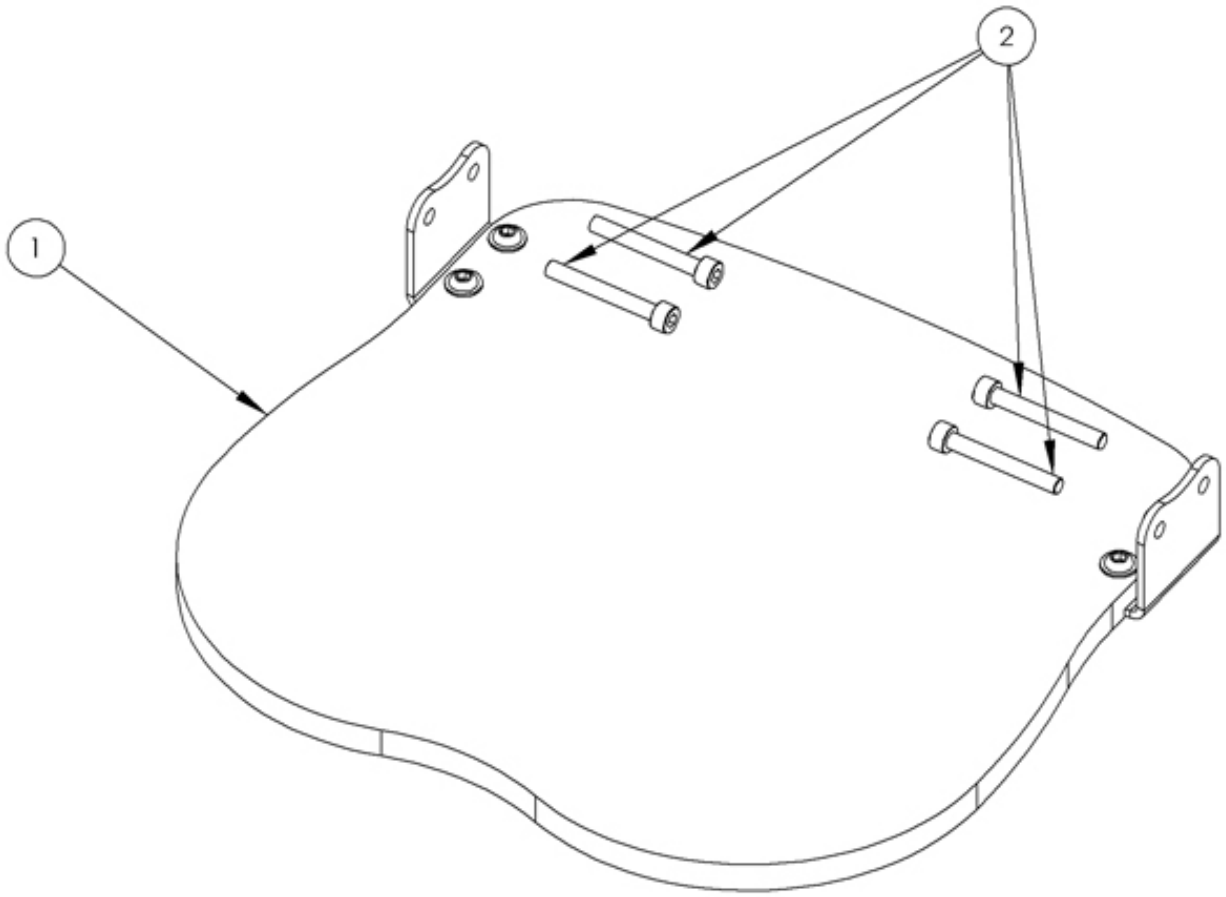

Pos.	Leckey Code	Description	Qty	Compatible with			
				Size 1	Size 2	Size 3	Size 4
1	135-1603	Footrest Size 1	1	✓			
1	135-2603	Footrest Size 2	1		✓		
1	135-3603	Footrest Size 3	1			✓	
1	135-4603	Footrest Size 4	1				✓
2	SP-1044	Footrest Attachment Screw Kit	1	✓	✓	✓	✓

PAL - Two Person
Table Assembly

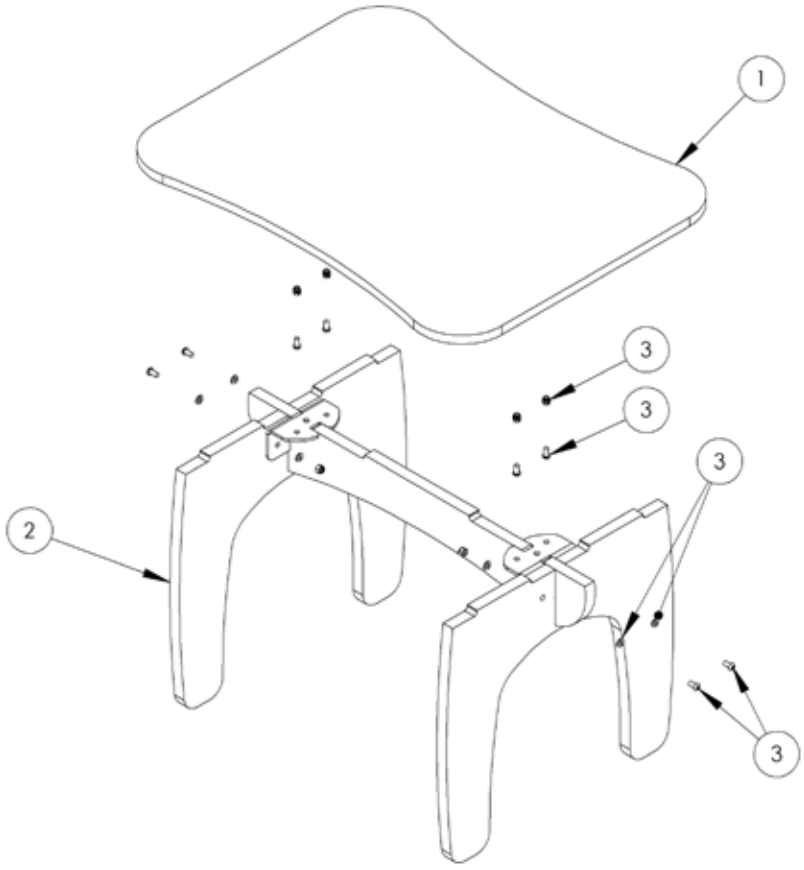

Pos.	Leckey Code	Description	Qty	Compatible with			
				Size 1	Size 2	Size 3	Size 4
1	135-1710	Table Top -Lacquered Finish	1	✓	✓	✓	
1	135-1710-XX	Table Top-Laminate Finish	1	✓	✓	✓	
2	135-1715	Table Leg Assembly Size 1	1	✓			
2	135-2715	Table Leg Assembly Size 2	1		✓		
2	135-3715	Table Leg Assembly Size 3	1			✓	
3	SP-1045	Table Attachment Screw Kit	1	✓	✓	✓	

PAL - Four Person
Table Assembly

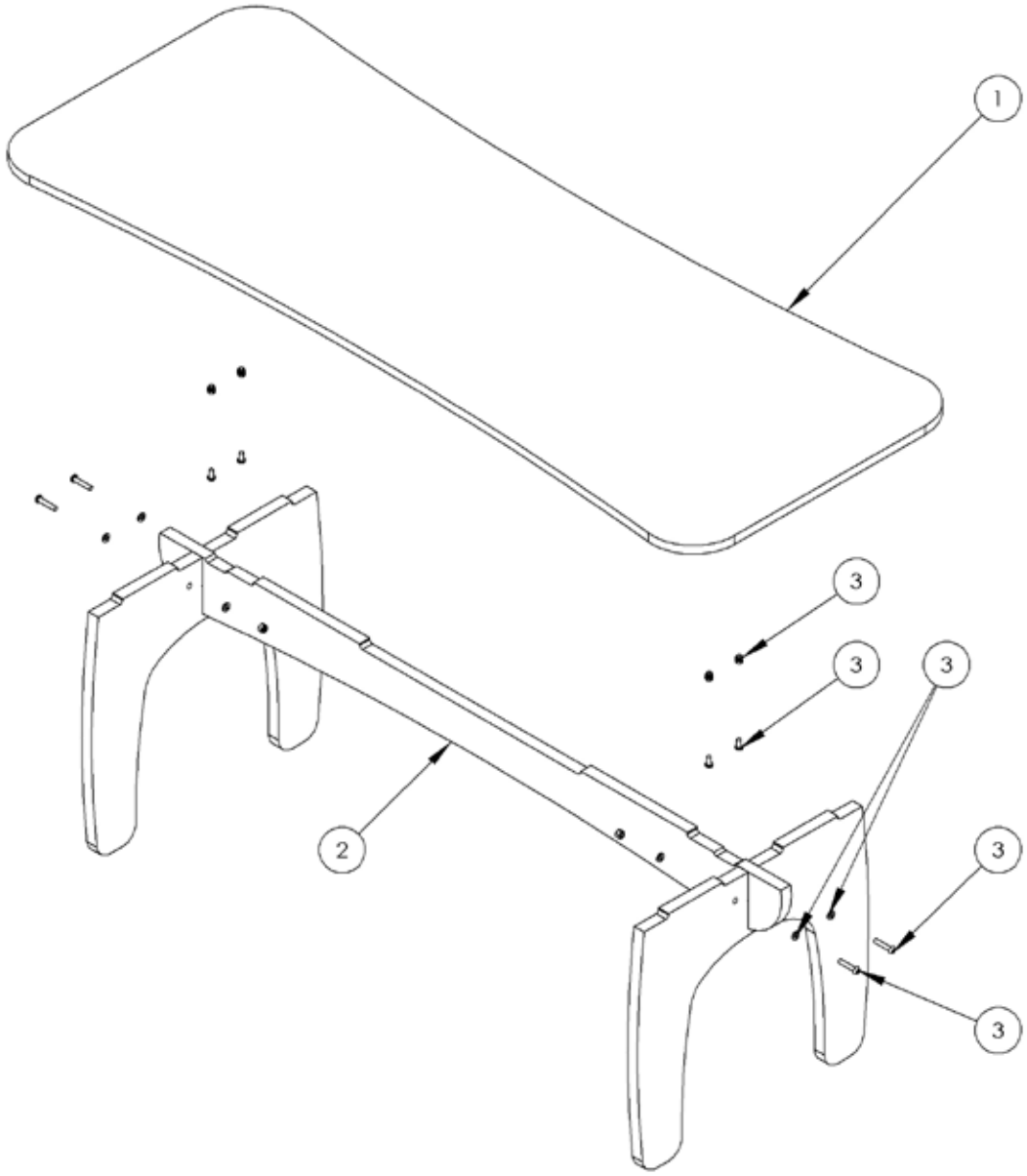

Pos.	Leckey Code	Description	Qty	Compatible with			
				Size 1	Size 2	Size 3	Size 4
1	135-1720	Table Top - Lacquered Finish	1	✓	✓	✓	
1	135-1720-XX	Table Top - Laminate Finish	1	✓	✓	✓	
2	135-1715	Table Leg Assembly Size 1	1	✓			
2	135-2715	Table Leg Assembly Size 2	1		✓		
2	135-3715	Table Leg Assembly Size 3	1			✓	
3	SP-1045	Table Attachment Screw Kit	1	✓	✓	✓	

PAL - Rocker/Stabiliser Assembly

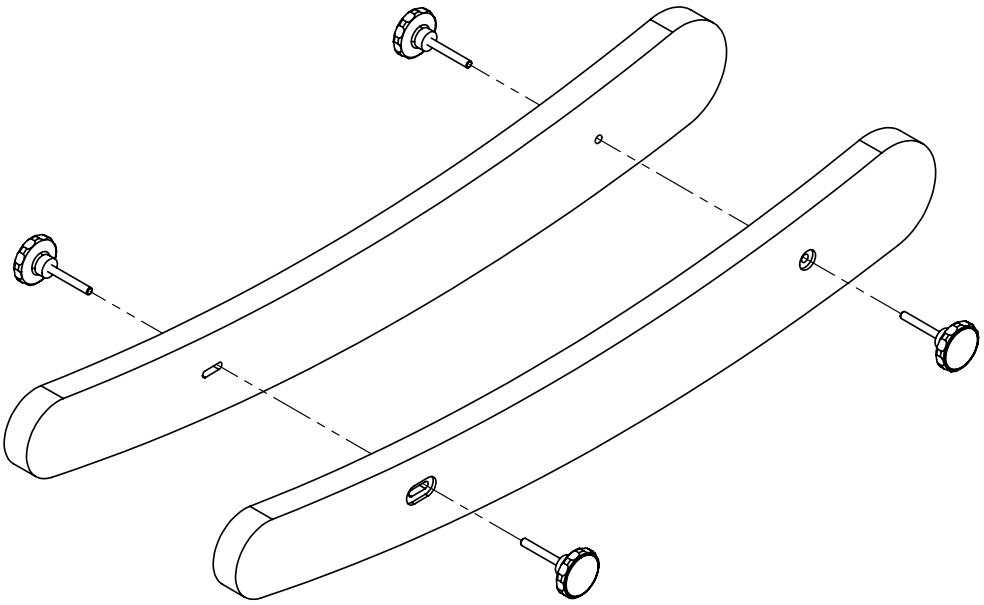

Pos.	Leckey Code	Description	Qty	Compatible with			
				Size 1	Size 2	Size 3	Size 4
1	135-1120	Rocker/Stabiliser Size 1	1	✓			
1	135-2120	Rocker/Stabiliser Size 2	1		✓		
1	135-3120	Rocker/Stabiliser Size 3	1			✓	
1	135-4120	Rocker/Stabiliser Size 4	1				✓